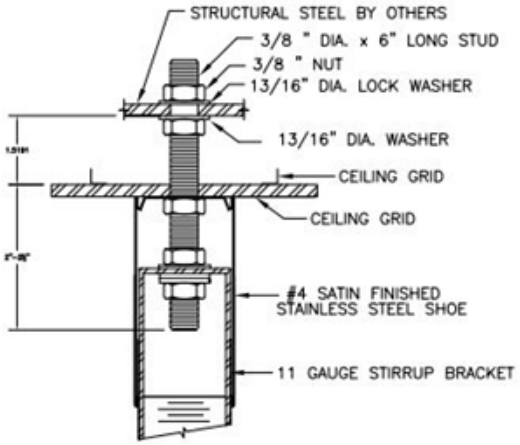

CEILING BOLT DETAIL
METAL PILASTERS

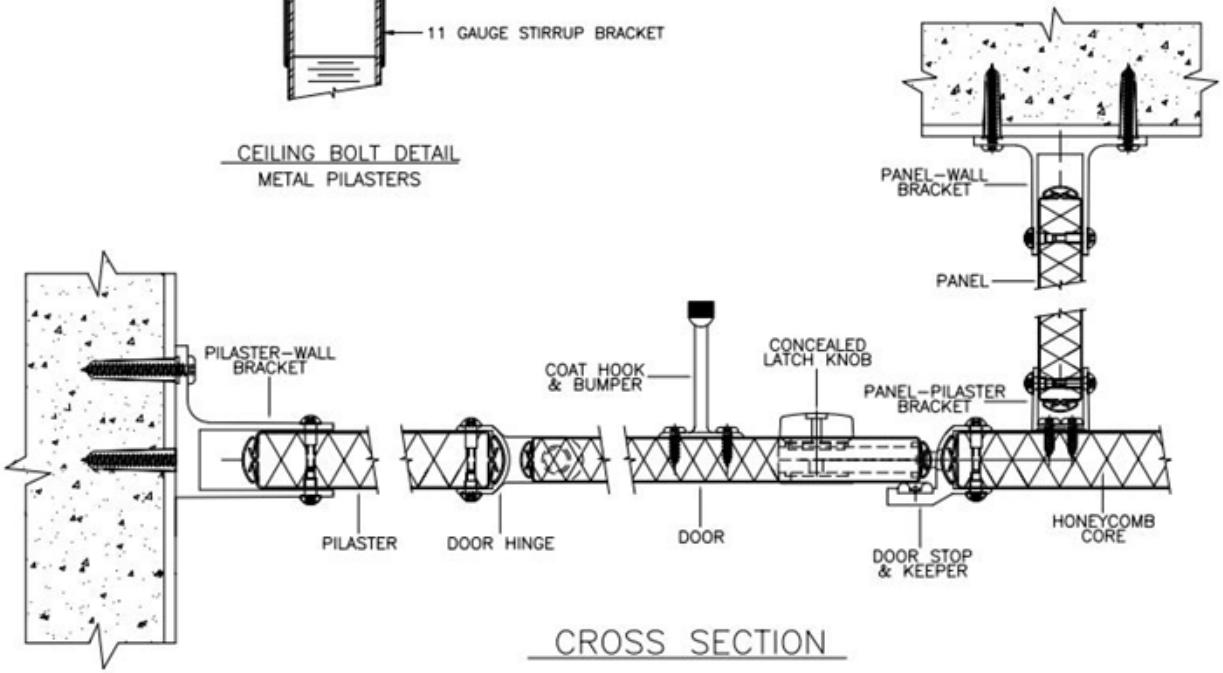

CROSS SECTION